A

AQA

Surname _____

Other Names _____

Centre Number _____

Candidate Number _____

Candidate Signature _____

GCSE

ENGINEERING

Unit 1 Written Paper

8852/W

Wednesday 22 May 2019 Morning

Time allowed: 2 hours

At the top of the page, write your surname and other names, your centre number, your candidate number and add your signature.

[Turn over]

BLANK PAGE

For this paper you must have:
- **normal writing and drawing instruments**
- **a calculator.**

INSTRUCTIONS

- **Use black ink or black ball-point pen. Use pencil only for drawing.**
- **Answer ALL questions.**
- **You must answer the questions in the spaces provided. Do not write on blank pages.**
- **Some questions will require you to shade a circle. If you make a mistake cross through the incorrect answer.**
- **Do all rough work in this book. Cross through any work you do not want to be marked.**

INFORMATION

- **The marks for questions are shown in brackets.**
- **The maximum mark for this paper is 120.**
- **You are reminded of the need for good English and clear presentation in your answers.**

DO NOT TURN OVER UNTIL TOLD TO DO SO

Answer ALL questions in the spaces provided.

For each answer completely fill in the circle alongside the appropriate answer.

CORRECT METHOD

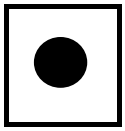

WRONG METHODS

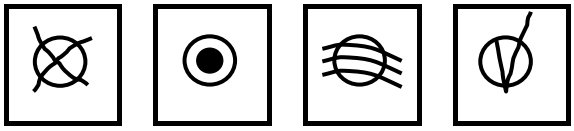

If you want to change your answer you must cross out your original answer as shown.

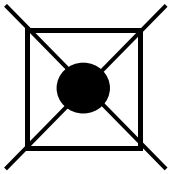

If you wish to return to an answer previously crossed out, ring the answer you now wish to select as shown.

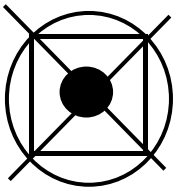

0 1 . 1 **The list below shows a range of different materials.**

Shade the circles next to the TWO alloys.
[2 marks]

- ○ **A** **Aluminium**
- ○ **B** **Brass**
- ○ **C** **Bronze**
- ○ **D** **Copper**
- ○ **E** **Lead**
- ○ **F** **Zinc**

[Turn over]

0 1 . 2 **Which ONE of the following properties best describes the ability of steel to be pressed or rolled into thin sheets? [1 mark]**

- ○ **A** **Ductility**
- ○ **B** **Hardness**
- ○ **C** **Malleability**
- ○ **D** **Toughness**

0 1 . 3 **Complete the following statement using the word bank provided. [3 marks]**

WORD BANK

- **ductility**
- **galvanising**
- **hardness**
- **normalising**
- **quenching**
- **sintering**
- **stiffness**
- **strength**
- **toughness**

Annealing is a heat treatment process which reduces the _____ of a material, and helps to increase its _____.

Some materials, like copper, can be cooled quickly during the annealing process by _____.

0 1 . 4 **Shade ONE circle that gives the name of the process described below:**

The joining of two metal parts by heating both surfaces together to the point of melting. [1 mark]

- ○ **A Brazing**
- ○ **B Milling**
- ○ **C Soldering**
- ○ **D Welding**

0 1 . 5 **Which of the following shows a dimension of more than 35 mm? [1 mark]**

- ○ **A** = 35 mm
- ○ **B** < 35 mm
- ○ **C** > 35 mm
- ○ **D** ± 35 mm

0 1 . 6 **Which is the correct equation for calculating pressure? [1 mark]**

- ○ **A** $P = A / F$
- ○ **B** $P = F / A$
- ○ **C** $P = F \times A$

[Turn over]

0 1 . 7 **Which ONE of the following is a composite material? [1 mark]**

- ○ **A** **Cast iron**
- ○ **B** **Polycarbonate**
- ○ **C** **Structural concrete**
- ○ **D** **Vulcanised rubber**

10

BLANK PAGE

[Turn over]

0 2 **A car body shell is shown in FIGURE 1.**

FIGURE 1

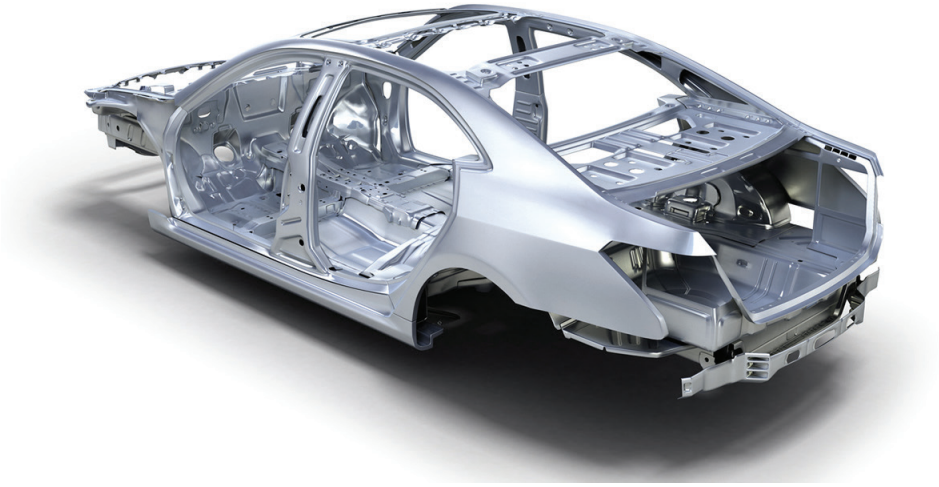

0 2 . 1 **Aluminium alloy and low carbon steel can be used when manufacturing car bodies.**

Compare the TWO materials in terms of the following:

[4 marks]

Differences _____

_____

_____

_____

_____

_____

Shared characteristics _____

_____

_____

_____

_____

_____

0 2 . 2 **Analyse the TWO materials in terms of ease of manufacturing car bodies. [2 marks]**

_____

_____

_____

_____

_____

[Turn over]

6

0 3 **A chain and sprocket is shown in FIGURE 2.**

A pulley and belt is shown in FIGURE 3.

FIGURE 2

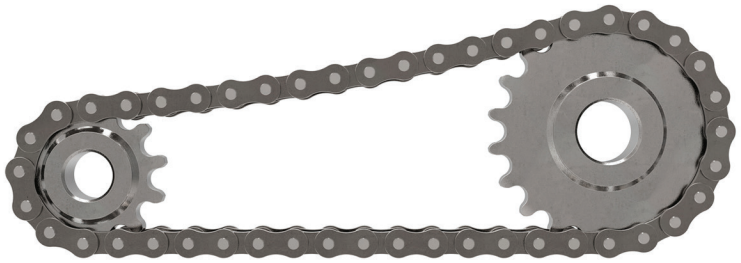

FIGURE 3

0 3 . 1 **The rear wheel of a motorbike can be driven by a chain and sprocket or a pulley and belt.**

Give TWO advantages and TWO disadvantages of using a chain and sprocket rather than a pulley and belt. [4 marks]

Advantage 1 _____

_____

_____

Advantage 2 _____

_____

_____

Disadvantage 1 _____

_____

_____

Disadvantage 2 _____

_____

_____

0 3 . 2 **In a chain and sprocket system, the driver sprocket has 13 teeth.**

If a gear ratio of 1:3 is required, calculate how many teeth are needed on the driven sprocket.

You MUST show your working and the formula you are using. [3 marks]

Formula _____

_____

Working _____

_____

_____

_____

_____

Answer _____

0 3 . 3 **An axle for a motorbike wheel is manufactured from a 30 mm diameter steel bar by sawing and machining.**

FIGURE 4 shows a drawing of the finished axle. All dimensions are in mm.

FIGURE 4

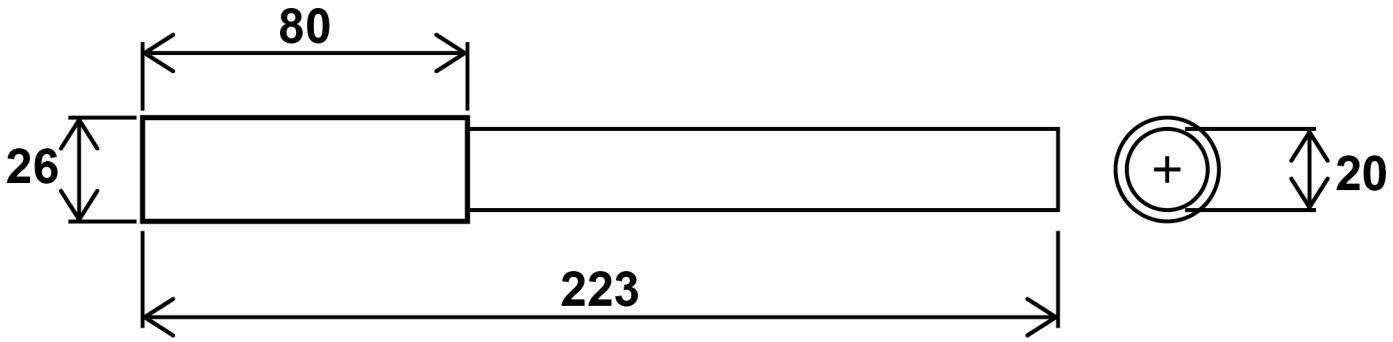

Calculate how many axles can be sawn from a 1.5 m long steel bar.

The saw cut is 2 mm wide. [2 marks]

Working _____

_____

_____

Answer _____

[Turn over]

0 3 . 4 **Using notes and sketches below and on page 19, describe how the steel bar would be turned to the correct dimensions for the axle using a centre lathe.**

Include the names of tools and processes, and safety issues. [8 marks]

[Turn over]

BLANK PAGE

0 3 . 5 **Name TWO tools that could be used to measure the diameter of the turned axle to an accuracy of 0.01 mm. [2 marks]**

Tool 1 _____

_____

Tool 2 _____

_____

[Turn over]

0 3 . 6 **To help secure the axle to a motorbike, a nut and steel washer are needed.**

The washer is punched from a piece of square sheet steel measuring 32 mm x 32 mm.

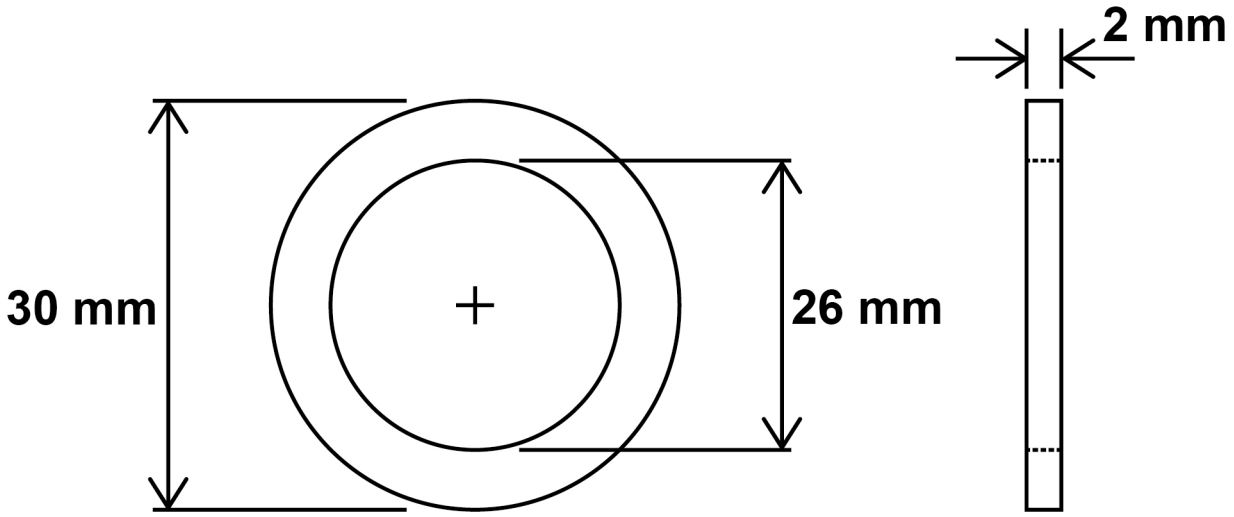

Calculate the percentage (%) of waste material produced during the production of one washer.

You should assume a value for pi (π) of 3.142
[6 marks]

Working _____

_____

_____

_____

Answer _____

0 3 . 7 **The washer and the axle have a surface finish applied to them.**

Give TWO reasons why engineered parts have surface finishes applied. [2 marks]

Reason 1 _____

_____

_____

Reason 2 _____

_____

_____

0 3 . 8 **Name ONE surface finishing process that would give a ZINC COATING to the steel washer. [1 mark]**

_____

_____

_____

28

0 4 . 1 **An engineering company is designing a ladder for use when installing satellite television dishes. The ladder must be able to be carried easily by one person.**

Identify a suitable non-metallic material for the ladder and give TWO reasons for your choice. [3 marks]

Material _____

_____

Reason 1 _____

_____

_____

Reason 2 _____

_____

_____

[Turn over]

0 4 . 2 **The ladder needs to reach a height of 5 metres and must stand at least 2 metres away from the base of the wall for safety reasons.**

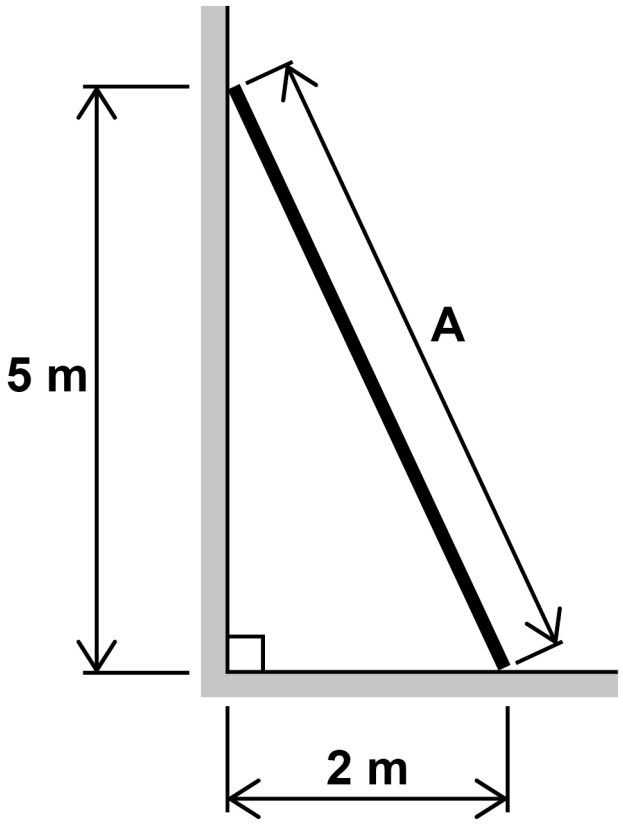

Calculate the minimum length of the ladder (A). Give your answer in MILLIMETRES.

You MUST show your working. [3 marks]

Working _____

_____

_____

_____

_____

_____

_____

_____

_____

_____

Answer _____ **mm**

[Turn over]

6

0 5 . 1 **A company that makes fishing line wants to carry out some tests to check the strength of the material.**

State which force is applied when an item is stretched. [1 mark]

_____

_____

_____

0 5 . 2 **To test the strength of the line, one end is secured in a clamp, and a weight is hung from the other end.**

The length of the line is measured and then the weight increased. Each time the weight increases, the length of the line is measured again.

The results of the test are shown in FIGURE 5, on the opposite page.

FIGURE 5

Weight (g)	0	50	100	150	200	250	300	350	400
Length (mm)	300	302	305	311	318	326	335	345	356

Using the equation below, calculate the strain if a weight of 400 grams is applied to the fishing line. Show your working.

Strain = change in length/original length
($\varepsilon = \delta l / l$)

[2 marks]

Working _____

_____

_____

_____

_____

Answer _____

[Turn over]

BLANK PAGE

0 5 . 3 **Refer to FIGURE 5, on page 29. Calculate the percentage (%) change in length when a weight of 300 grams is applied to the line. Show your working.**

Give your answer to ONE decimal place.
[2 marks]

Working _____

_____

_____

_____

_____

Answer _____

[Turn over]

0 5 . 4 **On the grid below, and using all the data given in FIGURE 5, on page 29, plot a graph to show the relationship between the weight applied to the fishing line and the change in length.**

Marks will be awarded for:

- **labelling the axes**
- **plotting the data onto the graph**
- **drawing a trend line onto the plotted data.**

[4 marks]

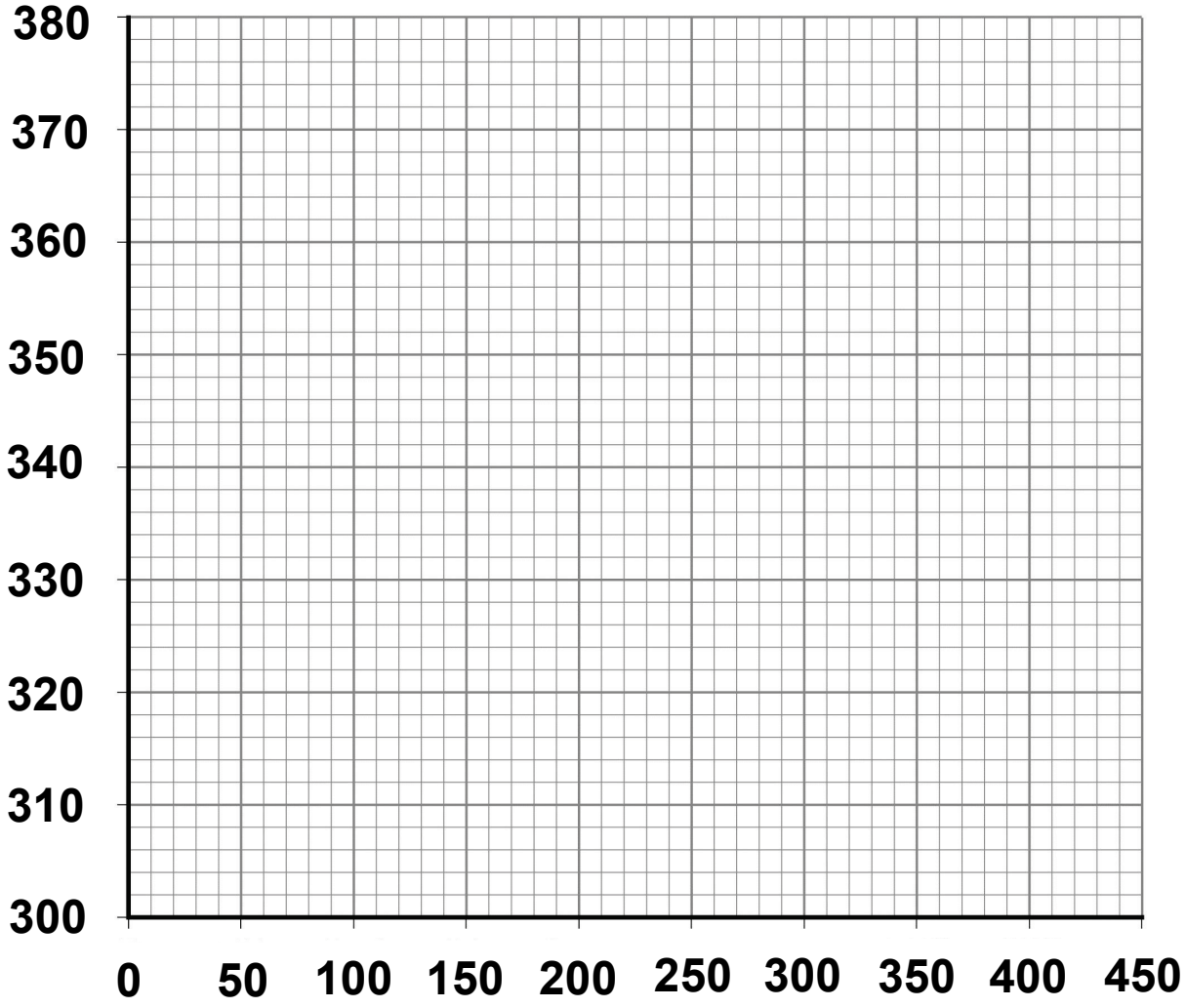

0 5 . 5 **Estimate the length of the fishing line if the weight being applied is 450 grams. [1 mark]**

_____

_____

[Turn over]

10

0 6 . 1 **Study the diagram of the mechanical system shown in FIGURE 6.**

FIGURE 6

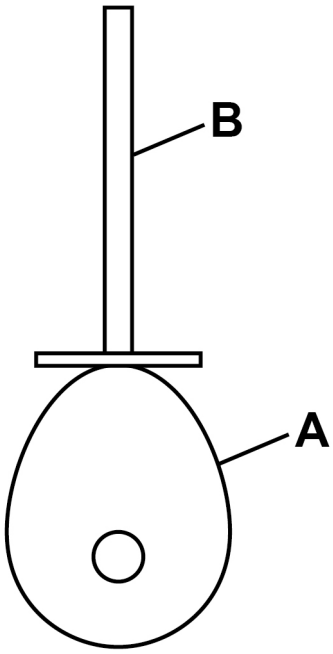

Complete the following statements:

[4 marks]

Part A is a _____ and

part B is a _____.

The mechanical system converts

_____motion into

_____motion.

BLANK PAGE

[Turn over]

0 6 . 2 **FIGURE 7 shows a component often used in mechanical systems.**

FIGURE 7

Name the component shown in FIGURE 7.
[1 mark]

Answer _____

0 6 . 3 **Give TWO reasons why the component in FIGURE 7 is used in mechanical systems.**
[2 marks]

Reason 1 _____

_____

_____

Reason 2 _____

_____

_____

[Turn over]

7

0 7 **The capacity of a water bottle needs to be 750 ml.**

Calculate the minimum height of the bottle if the diameter of the bottle is 70 mm.

You MUST show your working. [5 marks]

Formula for volume of cylinder

_____

Working _____

_____

_____

_____

_____

_____

_____

_____

_____

Answer with units _____

5

0 8 . 1 **FIGURE 8 shows an injection moulding machine.**

Label the FIVE major parts of the machine in the spaces provided. [5 marks]

FIGURE 8

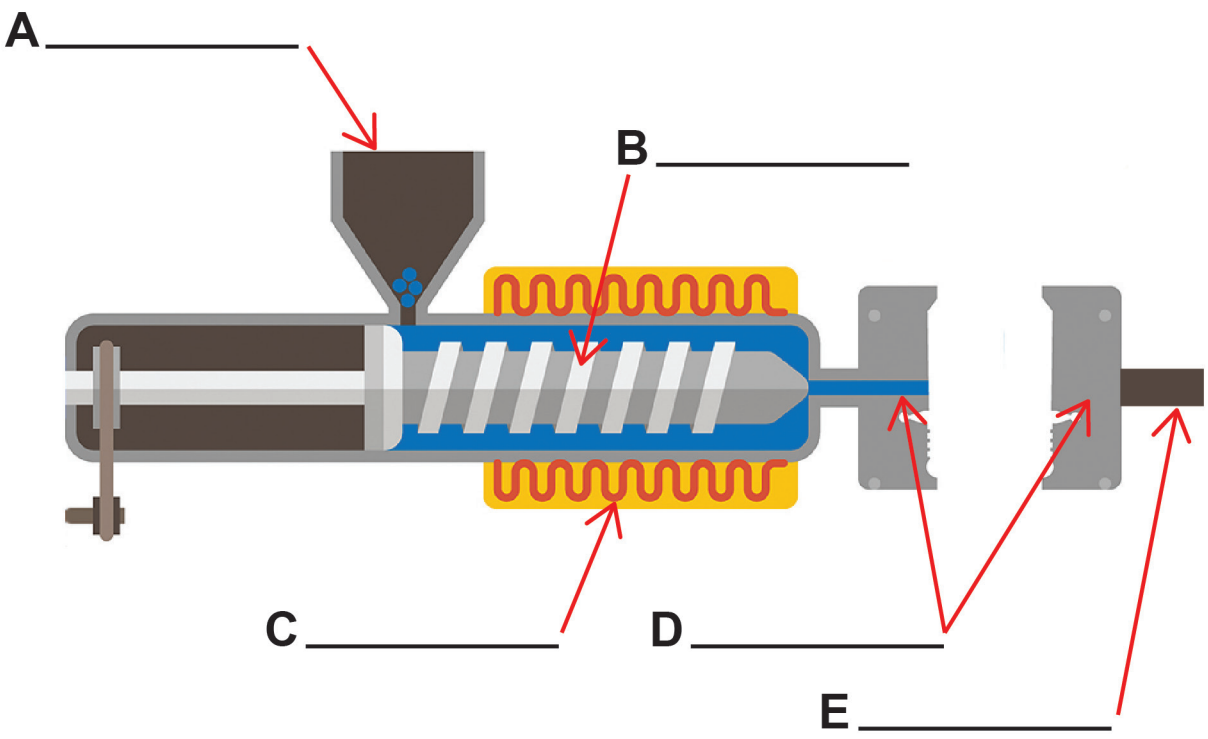

[Turn over]

0 8 . 2 **Give THREE reasons why injection moulding is often used to manufacture parts. [3 marks]**

Reason 1 _____

_____

_____

Reason 2 _____

_____

_____

Reason 3 _____

_____

_____

0 8 . 3 **Name a suitable thermoplastic used in the injection moulding process, and explain why that material is suitable. [3 marks]**

Thermoplastic _____

_____

Explanation _____

_____

_____

_____

_____

[Turn over]

0 8 . 4 **Emerging technologies such as rapid prototyping (3-D printing) and automated processes have affected both manufacturing and product design.**

Analyse and evaluate the impact of these emerging technologies on production and society.

Give examples in your answer. [9 marks]

20

0 9 . 1 **FIGURE 9 shows a secure entry system for a school door. The door is opened using a keypad.**

FIGURE 9

An example of an operating requirement for the system is given below:

Requirement: The door can only be opened when the correct code is entered on the keypad.

Reason: So only authorised people can enter the school.

Give two ADDITIONAL operating requirements, and explain why each requirement is important. [4 marks]

Requirement 1 _____

_____

_____

Reason _____

_____

_____

Requirement 2 _____

_____

_____

Reason _____

_____

_____

[Turn over]

0 9 . 2 **The entry system can be modified by replacing the keypad with a card reading device so that the door can be opened with a magnetic swipe-card.**

Evaluate the use of a keypad and a swipe-card as methods of entry.

Select the most suitable method and give reasons for your choice. [3 marks]

0 9 . 3 **A system is designed to count and clearly display the number of people entering through the door in a day.**

Complete the system diagram below by adding the names of input, process and output components that could be used so that the system works as intended. [3 marks]

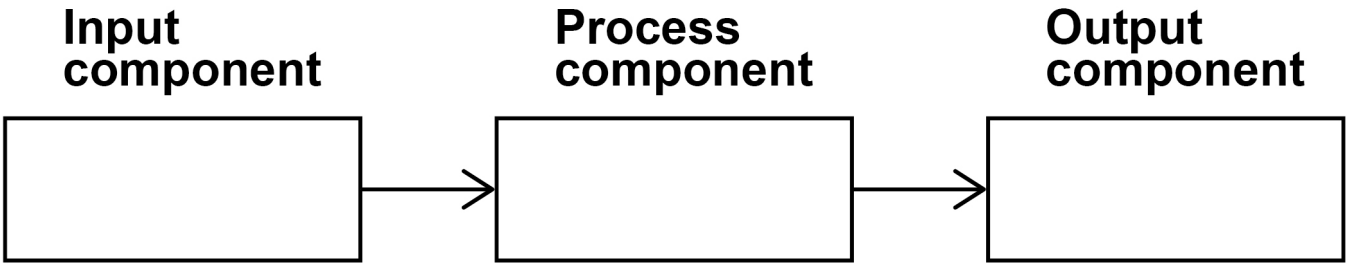

[Turn over]

10

1 0 A circuit diagram for a torch is shown in FIGURE 10.

FIGURE 10

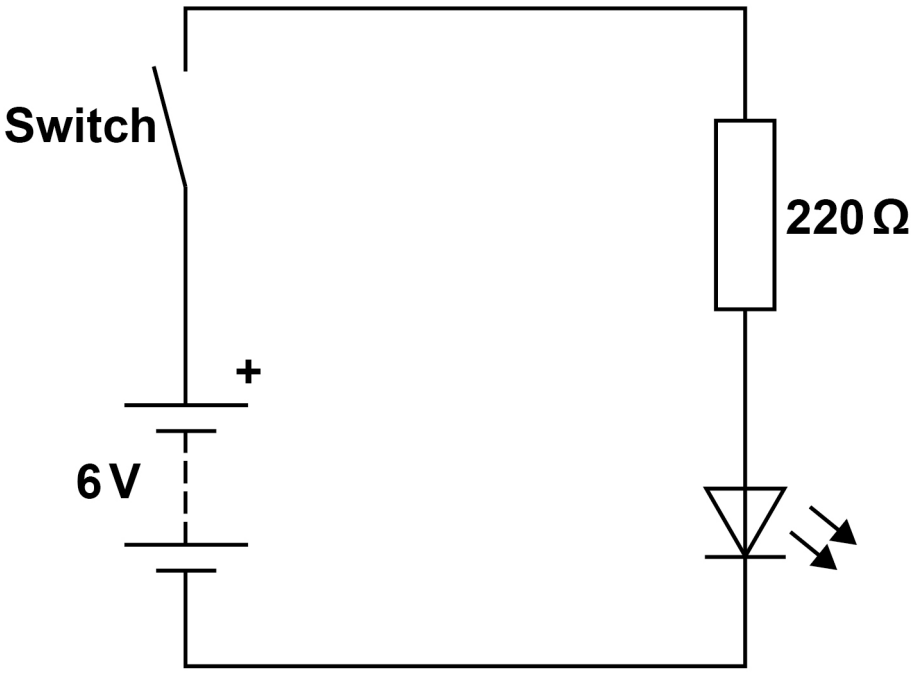

1 0 . 1 Using Ohm's law, calculate the current flowing through the circuit. [4 marks]

Formula used _____

_____

Working _____

_____

_____

_____

Answer with units _____

1 0 . 2 **Explain why a switch is required in the torch circuit. [2 marks]**

_____

_____

_____

_____

_____

_____

[Turn over]

6

1 1 **FIGURE 11 and FIGURE 12 show wind turbines on land, and offshore.**

FIGURE 11

FIGURE 12

BLANK PAGE

[Turn over]

Discuss the following aspects of the location of wind turbines, giving both advantages and disadvantages:

- **maintenance**
- **impact on the environment.**

[8 marks]

[Turn over]

8

1 2 **The system diagram in FIGURE 13 represents an alarm system.**

Sensor A and Sensor B are input components. The buzzer will sound if EITHER of the sensors detects movement.

FIGURE 13

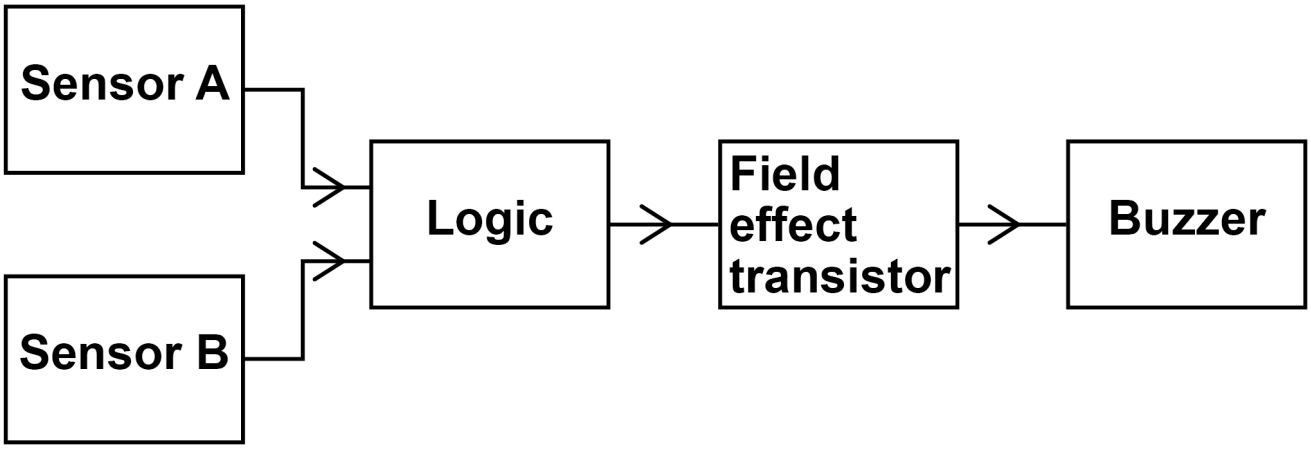

1 2 . 1 **Which logic function would be needed for the alarm in FIGURE 13 to work as intended?**

Shade the circle next to the correct answer. [1 mark]

○ **A AND**

○ **B NOT**

○ **C OR**

1 2 . 2 **The Field Effect Transistor (FET) performs which function in the system? [1 mark]**

- ○ **A Counter**
- ○ **B Input**
- ○ **C Interface**
- ○ **D Output**

1 2 . 3 **Explain why a FET is used in the alarm system shown in FIGURE 13. [2 marks]**

_____

_____

_____

_____

_____

_____

END OF QUESTIONS

4

BLANK PAGE

For Examiner's Use	
Question	Mark
1	
2	
3	
4	
5	
6	
7	
8	
9	
10	
11	
12	
TOTAL	