A

AQA

Surname _____

Other Names _____

Centre Number _____

Candidate Number _____

Candidate Signature _____

I declare this is my own work.

A-level

PHYSICS

Paper 1

7408/1

Monday 18 May 2020 Afternoon

Time allowed: 2 hours

At the top of the page, write your surname and other names, your centre number, your candidate number and add your signature.

[Turn over]

For this paper you must have:
- **a pencil and a ruler**
- **a scientific calculator**
- **a Data and Formulae Booklet.**

INSTRUCTIONS

- **Use black ink or black ball-point pen.**
- **Answer ALL questions.**
- **You must answer the questions in the spaces provided. Do not write on blank pages.**
- **If you need extra space for your answer(s), use the lined pages at the end of this book. Write the question number against your answer(s).**
- **Do all rough work in this book. Cross through any work you do not want to be marked.**
- **Show all your working.**

INFORMATION

- **The marks for questions are shown in brackets.**
- **The maximum mark for this paper is 85.**
- **You are expected to use a scientific calculator where appropriate.**
- **A Data and Formulae Booklet is provided as a loose insert.**

DO NOT TURN OVER UNTIL TOLD TO DO SO

SECTION A

Answer ALL questions in this section.

0 1 . 1 **Determine whether the following reaction is a possible decay for the neutral pion π^0.**

$$\pi^0 \longrightarrow e^- + \mu^+ + \bar{\nu}_e$$ **[2 marks]**

0 1 . 2 **State the TWO possible quark configurations of a π^0. [1 mark]**

1 _____

_____

2 _____

_____

0 1 . 3 **A student suggests that the kaon K^0 and the anti-kaon $\overline{K^0}$ are the same particle.**

Discuss whether this suggestion is correct. [2 marks]

_____

_____

_____

_____

_____

_____

_____

0 1 . 4 **The nucleus is held together by a force. It was predicted that a particle exists that is responsible for this force. The particle itself must experience this force.**

The particle would have a rest energy between that of an electron and half that of a nucleon.

Discuss whether a kaon, a muon and a pion EACH have the properties of the predicted particle.

Information about these three particles is in the Data and Formulae Booklet. [4 marks]

[Turn over]

9

0 2 **FIGURE 1 shows an arrangement used to investigate the photoelectric effect.**

FIGURE 1

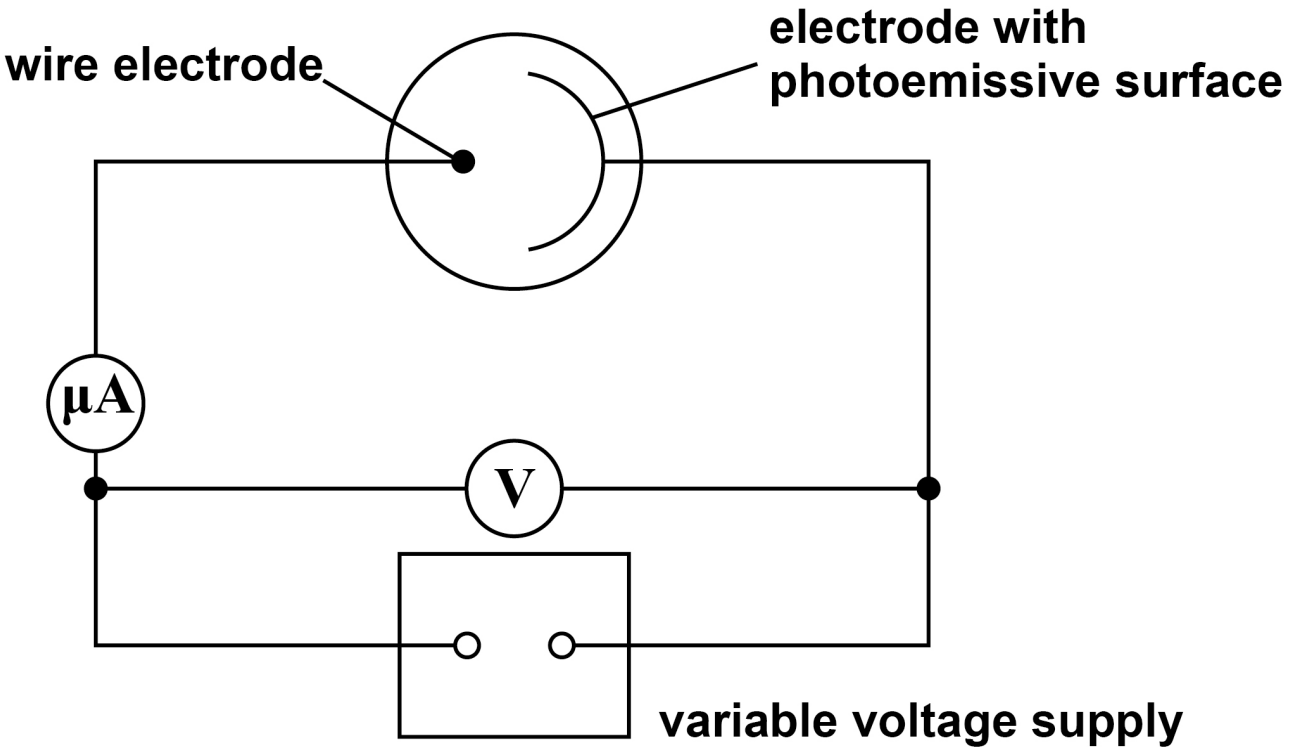

A current is measured on the microammeter only when electromagnetic radiation with a frequency greater than a certain value is incident on the photoemissive surface.

0 2 . 1 **Explain why the frequency of the electromagnetic radiation must be greater than a certain value. [2 marks]**

The apparatus in FIGURE 1 is used with a monochromatic light source of constant intensity. Measurements are made to investigate how the current I in the microammeter varies with positive and negative values of the potential difference V of the variable voltage supply.

FIGURE 2 shows how the results of the investigation can be used to find the stopping potential.

FIGURE 2

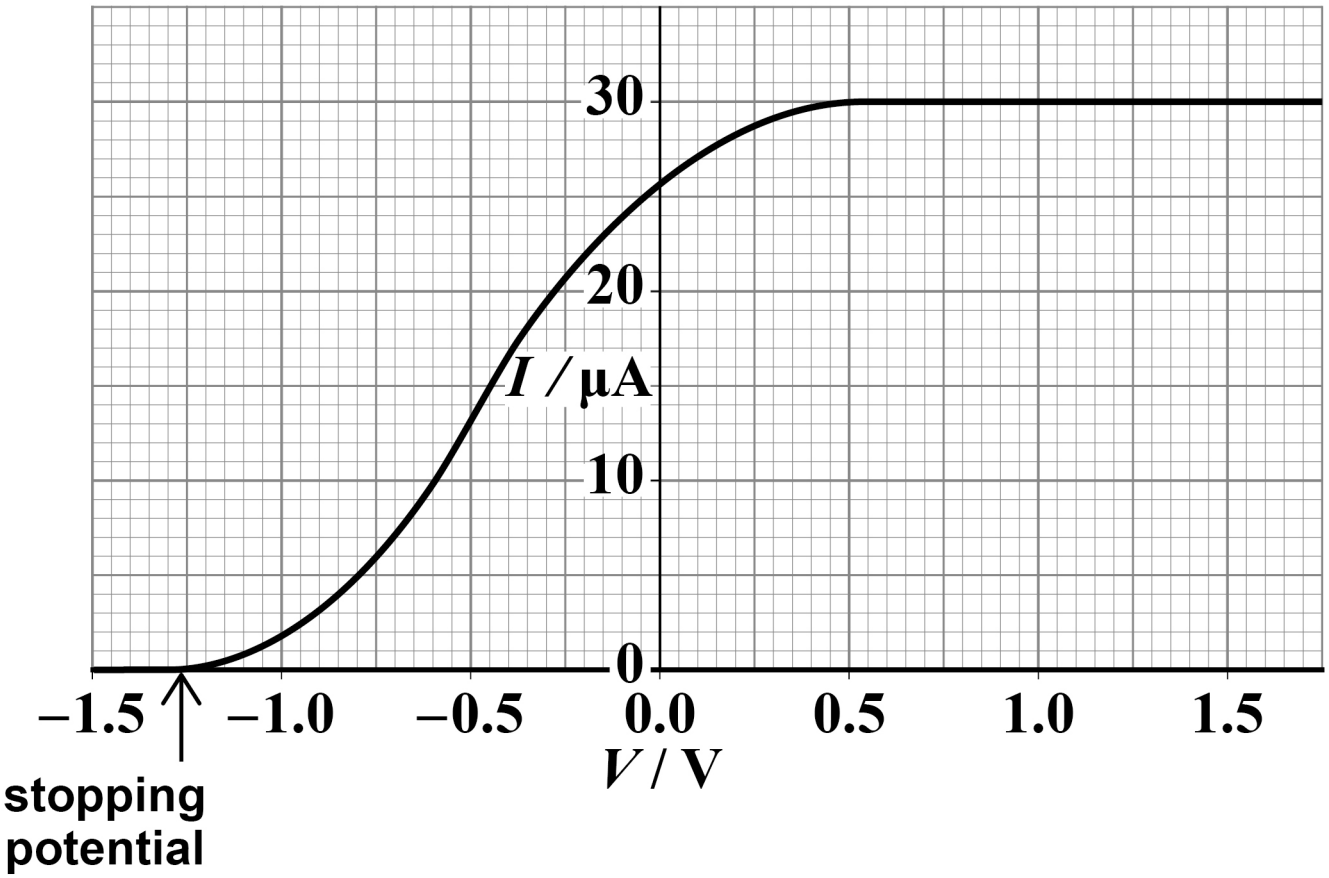

0 2 . 2 **Determine the number of photoelectrons per second leaving the photoemissive surface when the current is a maximum. [2 marks]**

number of photoelectrons per second =

_____

[Turn over]

BLANK PAGE

0 2 . 3 **Explain why I reaches a constant value for positive values of V. [2 marks]**

0 2 . 4 **Explain why I decreases as the value of V becomes more negative. [3 marks]**

BLANK PAGE

[Turn over]

0 2 . 5 **The investigation is repeated with a different photoemissive surface that has a smaller value of the work function. The source of electromagnetic radiation is unchanged.**

Discuss the effect that this change in surface has on the value of the stopping potential.
[3 marks]

[Turn over]

12

0 3 **A student investigates the interference of sound waves using two loudspeakers, P and Q, connected to a signal generator (oscillator). Each loudspeaker acts as a point source of sound.**

FIGURE 3 shows the arrangement.

FIGURE 3

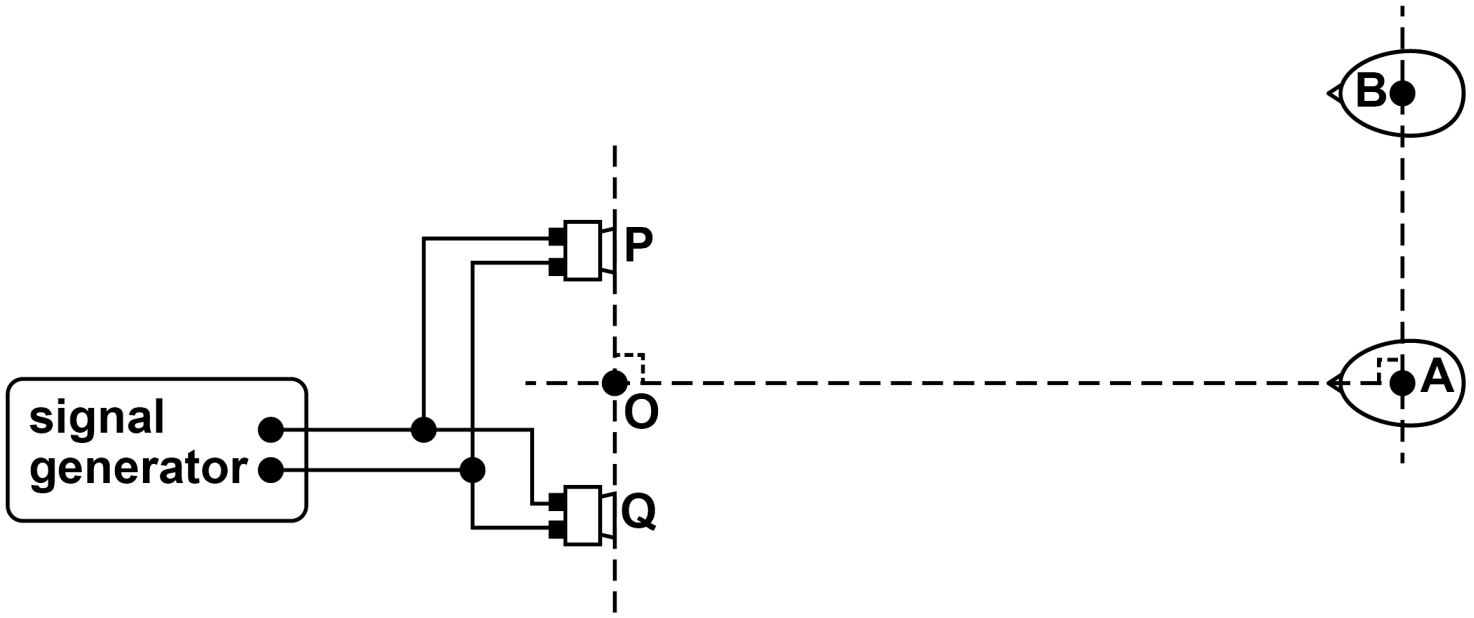

plan view not to scale

Point O is the midpoint between P and Q.

0 3 . 1 Explain why the two loudspeakers are coherent sources of sound waves.
[2 marks]

[Turn over]

REPEAT OF FIGURE 3

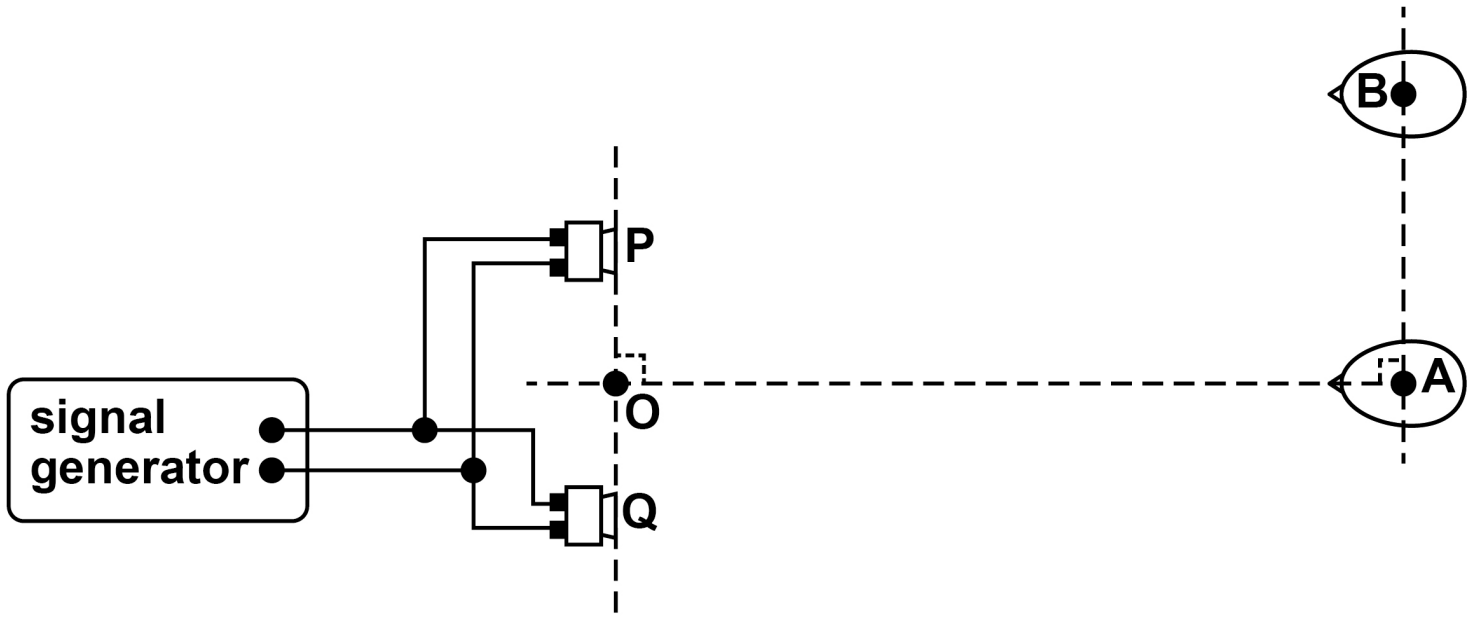

plan view not to scale

0 3 . 2 The student faces the two loudspeakers at point A. Point A is at equal distances from P and Q.

He then moves to point B, at right angles to the line OA, still facing the two loudspeakers.

As his head moves from A to B the amplitude of the sound wave he hears decreases and then increases. The amplitude starts to decrease again as he moves beyond B.

Explain why the variation in amplitude occurs as he moves from A to B. [3 marks]

[Turn over]

BLANK PAGE

[Turn over]

0 3 . 3 The student records the following data:

separation of the two loudspeakers $= 0.30\ \text{m}$

distance OA $= 2.25\ \text{m}$

distance from A to B $= 0.95\ \text{m}$

Show that the path difference for the sound waves from the two loudspeakers to point B is about $0.1\ \text{m}$. [3 marks]

0 3 . 4 The frequency of the sound wave is $2960\ \text{Hz}$.

Calculate the speed of sound from the student's data. [1 mark]

speed of sound = _____ m s^{-1}

25

[Turn over]

0 3 . 5 **The student moves his head to point C as shown in FIGURE 4. The emitted frequency of the sound from the loudspeakers is then gradually decreased.**

FIGURE 4

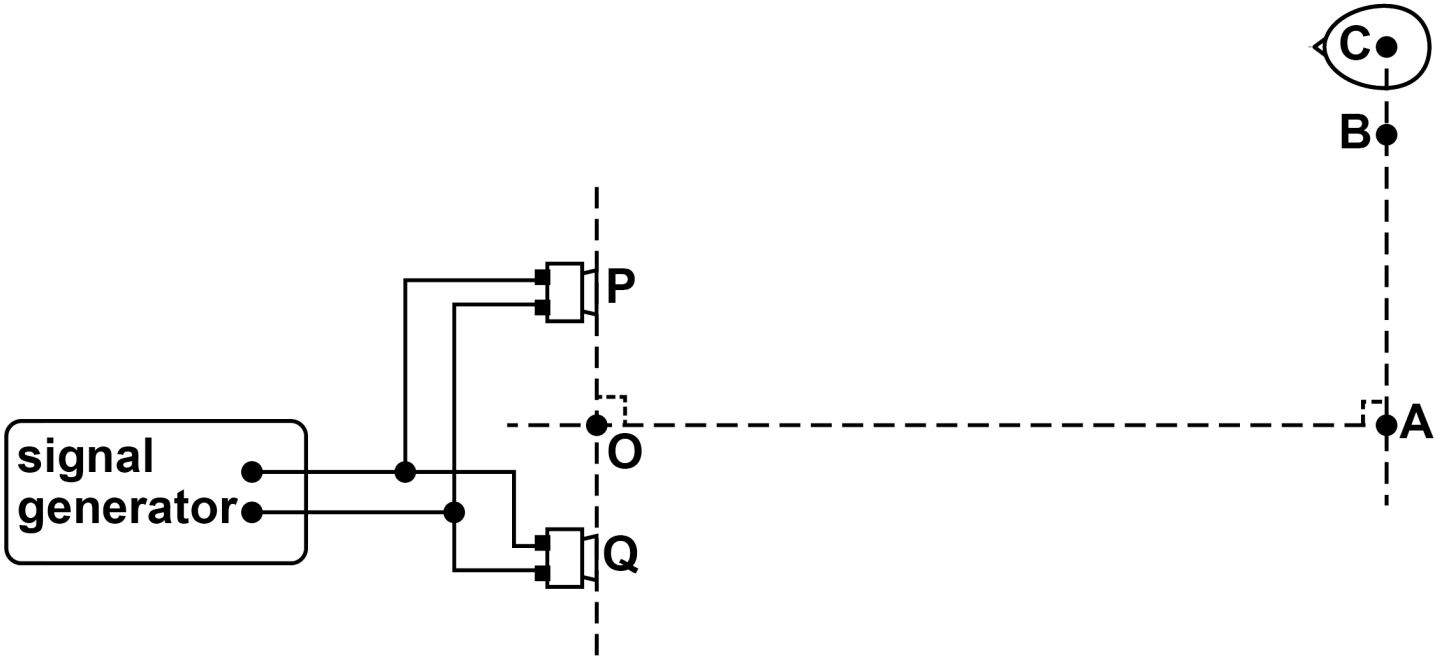

plan view not to scale

Discuss the effect that this decrease in frequency has on the amplitude of the sound wave heard by the student. [3 marks]

0 4 **A pair of cameras is used on a motorway to help determine the average speed of vehicles travelling between the two cameras.**

FIGURE 5 shows the speed–time graph for a car moving between the two cameras.

FIGURE 5

0 4 . 1 **The speed limit for the motorway between the two cameras is $22\ \mathrm{m\ s^{-1}}$.**

Determine whether the average speed of the car exceeded this speed limit. [3 marks]

0 4 . 2 **Markings called chevrons are used on motorways.**

The chevron separation is designed to give a driver time to respond to any change in speed of the car in front. The driver is advised to keep a minimum distance d behind the car in front, as shown in FIGURE 6.

FIGURE 6

The diagram is not drawn to scale.

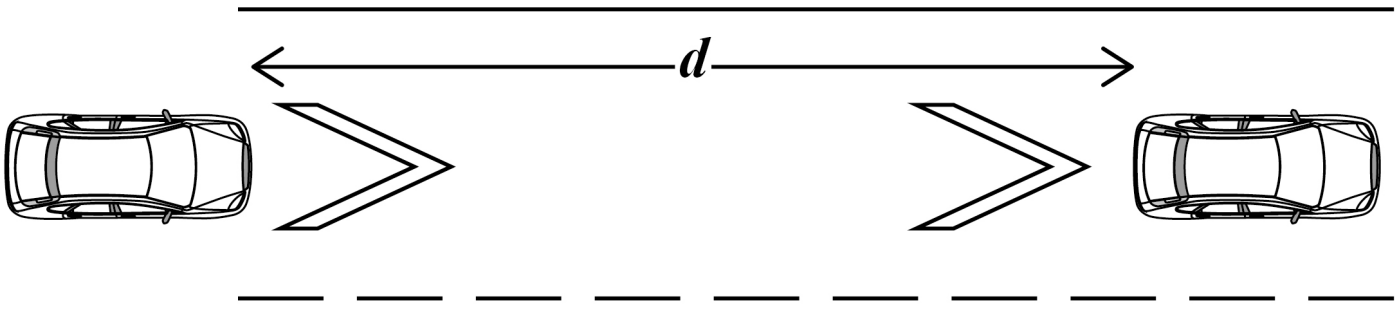

Government research suggests that the typical time for a driver to respond is between 1.6 s and 2.0 s.

Suggest a value for d where the speed limit is 31 m s^{-1}. [2 marks]

d = _____ m

0 4 . 3 **The chevron separation is based on the response time, not on the time taken for a car to stop.**

The brakes of a car are applied when its speed is $31\ \text{m s}^{-1}$ and the car comes to rest. The total mass of the car is $1200\ \text{kg}$.

The average braking force acting on the car is $6.8\ \text{kN}$.

Calculate the time taken for the braking force to stop the car AND the distance travelled by the car in this time. [4 marks]

time = _____ **s**

distance = _____ **m**

0 4 . 4 **Suggest why the chevron separation on motorways does not take into account the distance travelled as a car comes to rest after the brakes are applied. [1 mark]**

[Turn over]

0 4 . 5 **At bends on motorways the road is sloped so that a car is less likely to slide out of its lane when travelling at a high speed.**

FIGURE 7 shows a car of mass $1200\ \text{kg}$ travelling around a curve of radius $200\ \text{m}$. The motorway is sloped at an angle of 5.0°.

FIGURE 8, on the opposite page, shows the weight W and reaction force N acting on the car. The advisory speed for the bend is chosen so that the friction force down the slope is zero.

FIGURE 7

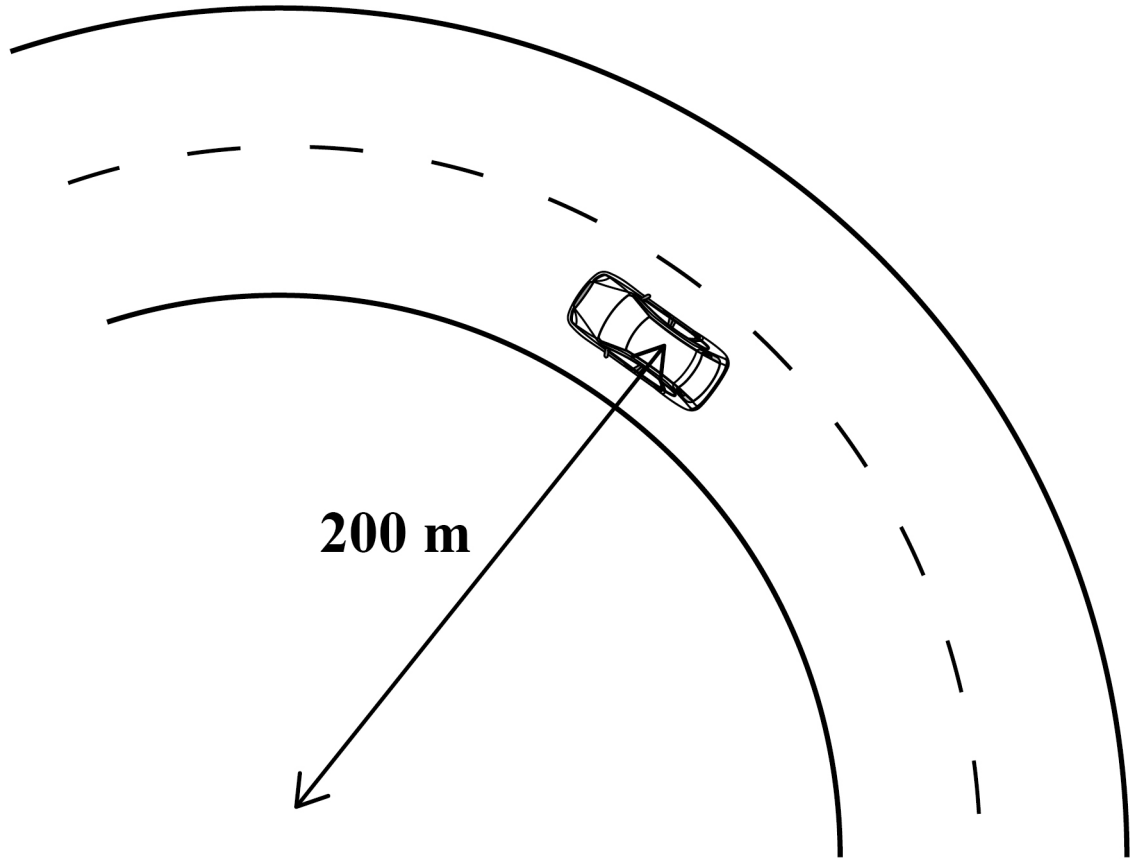

FIGURE 8

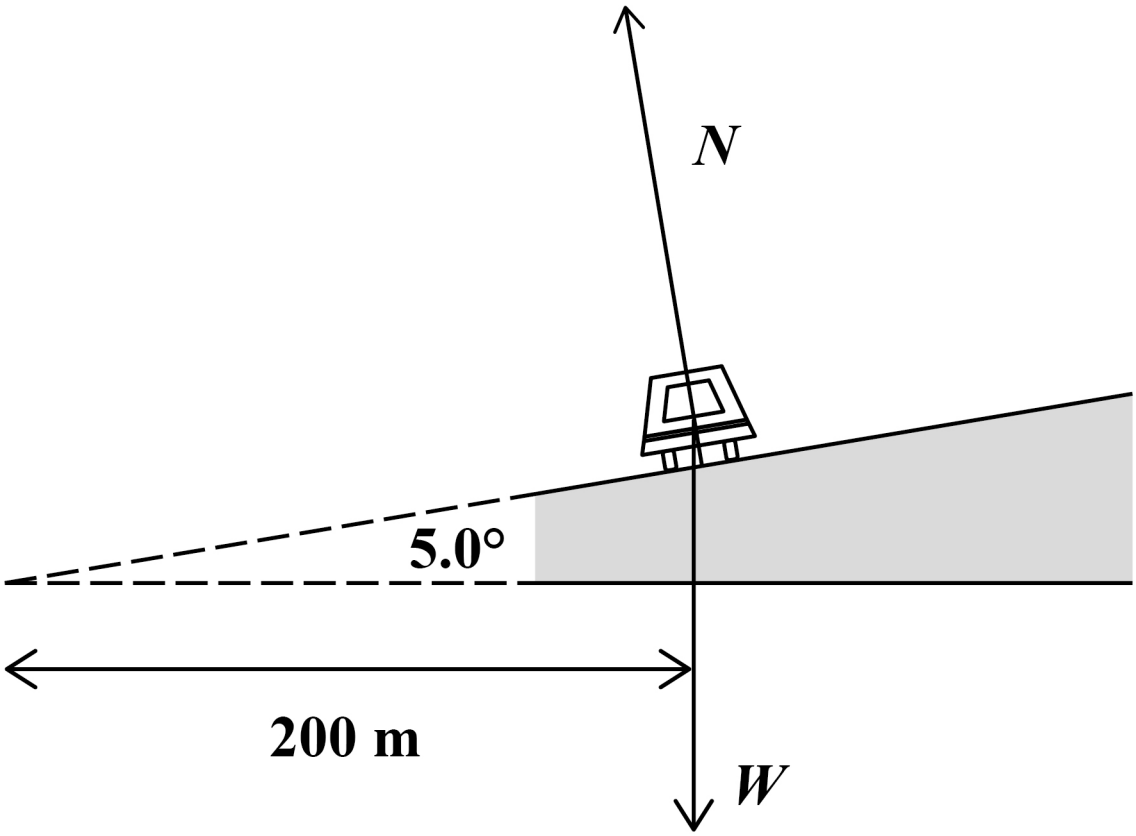

[Turn over]

BLANK PAGE

Suggest an appropriate advisory speed for this section of the motorway. [4 marks]

advisory speed = _____ m s^{-1}

[Turn over]

14

0 5 **FIGURE 9 shows some of the apparatus used in a demonstration of electrical power transmission using a dc power supply.**

FIGURE 9

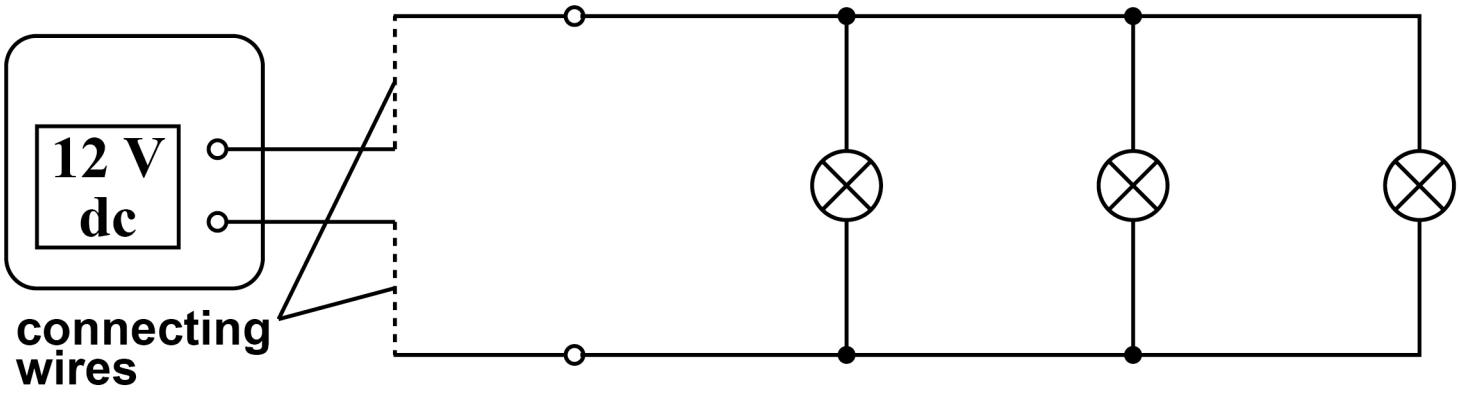

A power supply of emf 12 V and negligible internal resistance is connected to three identical 12 V, 1.5 W lamps in parallel.

0 5 . 1 **Show that the resistance of one of the lamps when it is operating at $12\ \text{V}$ is about $100\ \Omega$. [1 mark]**

[Turn over]

BLANK PAGE

0 5 . 2 **Initially the power supply is connected to the lamps using two short copper wires of negligible resistance.**

Calculate the current in the power supply. [2 marks]

current = _____ **A**

[Turn over]

0 5 . 3 The two short copper wires are replaced with two long constantan wires.

Show that the resistance of each length of constantan wire is about $50\ \Omega$.

length of each constantan wire = $2.8\ \text{m}$

diameter of constantan wires = $0.19\ \text{mm}$

resistivity of constantan = $4.9 \times 10^{-7}\ \Omega\ \text{m}$

[3 marks]

0 5 . 4 **The demonstration is intended to show that the lamps are significantly dimmer when connected using the long constantan wires than when using the short copper wires.**

Discuss whether the demonstration achieves this.

Support your answer with suitable calculations. [4 marks]

0 5 . 5 **Scientists and engineers are investigating the use of superconductors in electrical transmission.**

Discuss ONE advantage and ONE difficulty when using superconductors in electrical transmission over long distances. [3 marks]

Advantage _____

_____

_____

_____

_____

_____

Difficulty _____

_____

_____

_____

_____

_____

SECTION B

Each of Questions 06 to 30 is followed by four responses, A, B, C and D.

For each question select the best response.

Only ONE answer per question is allowed.

For each question, completely fill in the circle alongside the appropriate answer.

CORRECT METHOD

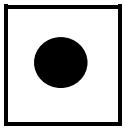

WRONG METHODS

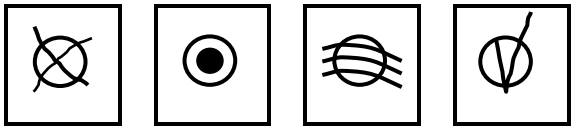

If you want to change your answer you must cross out your original answer as shown.

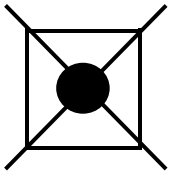

If you wish to return to an answer previously crossed out, ring the answer you now wish to select as shown.

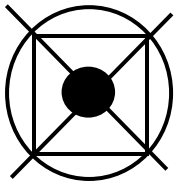

You may do your working in the blank space around each question but this will not be marked.
Do NOT use additional sheets for this working.

[Turn over]

0 6 **Mechanical power**

○ **A** **is a vector quantity.**

○ **B** **is measured in J.**

○ **C** **has base units of $\mathrm{kg\ m^2\ s^{-3}}$.**

○ **D** **can be calculated from force × distance moved.**

[1 mark]

0 7 Water waves of wavelength λ and wave speed v are related by $v = \sqrt{k\lambda}$ where k is a constant.

What is a possible SI unit for k? [1 mark]

○ **A** $\mathrm{m\ s^{-2}}$

○ **B** $\mathrm{m\ s^{-1}}$

○ **C** $\mathrm{m^{\frac{3}{2}}\ s^{-1}}$

○ **D** $\mathrm{m^{\frac{1}{2}}\ s^{-1}}$

[Turn over]

0 8 A photon has energy of 1×10^{18} eV.

An object of mass 0.03 kg has kinetic energy equal to the energy of the photon.

What is the speed of the object? [1 mark]

○ **A** $1\ \text{m s}^{-1}$

○ **B** $3\ \text{m s}^{-1}$

○ **C** $10\ \text{m s}^{-1}$

○ **D** $30\ \text{m s}^{-1}$

0 9 **A deuterium nucleus and a tritium nucleus fuse together to produce a helium nucleus and particle X.**

$$^{2}_{1}\mathrm{H} + ^{3}_{1}\mathrm{H} \rightarrow ^{4}_{2}\mathrm{He} + \mathrm{X}$$

What is X? [1 mark]

○ **A an electron**

○ **B a neutron**

○ **C a positron**

○ **D a proton**

[Turn over]

1 0 The radioactive nuclide $^{232}_{90}\mathrm{Th}$ decays by one α emission followed by two β^- emissions.

Which nuclide is formed as a result of these decays? [1 mark]

○ A $^{238}_{92}\mathrm{U}$

○ B $^{230}_{90}\mathrm{Th}$

○ C $^{228}_{90}\mathrm{Th}$

○ D $^{228}_{88}\mathrm{Rn}$

1 1 **What quantity is measured in $\mathrm{kW\,h}$?**
[1 mark]

- ○ **A charge**
- ○ **B current**
- ○ **C energy**
- ○ **D power**

[Turn over]

BLANK PAGE

1 2 **An electron collides with an isolated atom and raises an atomic electron to a higher energy level.**

Which statement is correct? [1 mark]

○ **A The colliding electron is captured by the nucleus of the atom.**

○ **B A photon is emitted when the electron rises to the higher energy level.**

○ **C An electron is emitted when the excited electron returns to the ground state.**

○ **D The colliding electron transfers energy to the atomic electron.**

[Turn over]

1 3 **Which graph shows the variation of momentum p with wavelength λ of a photon? [1 mark]**

○ **A**

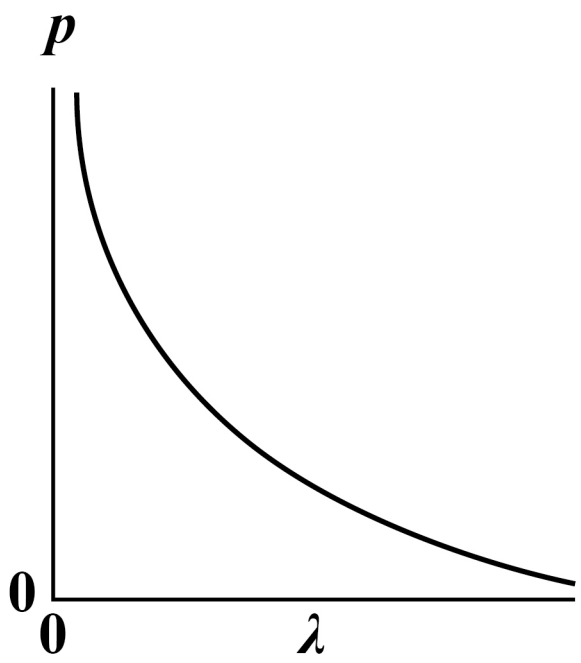

○ **B**

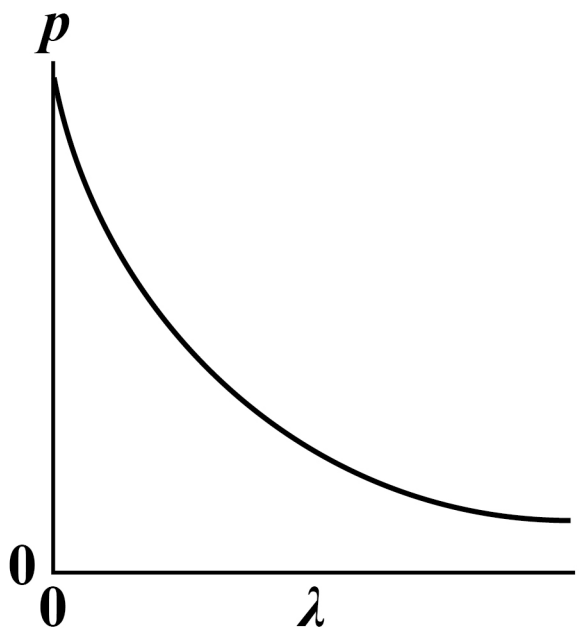

C

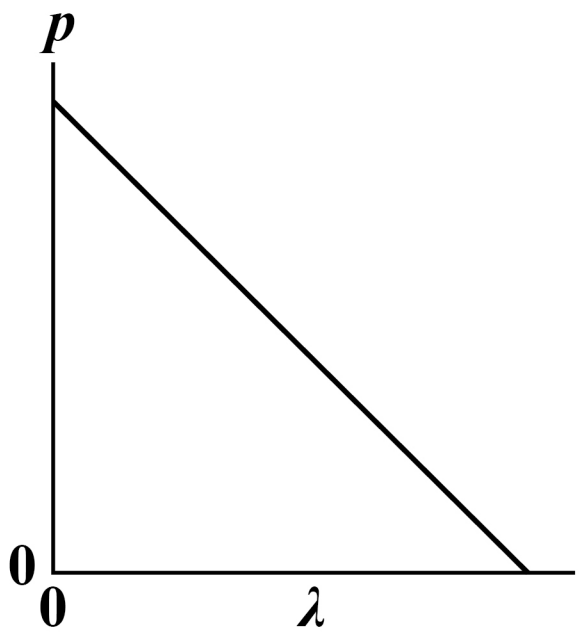

D

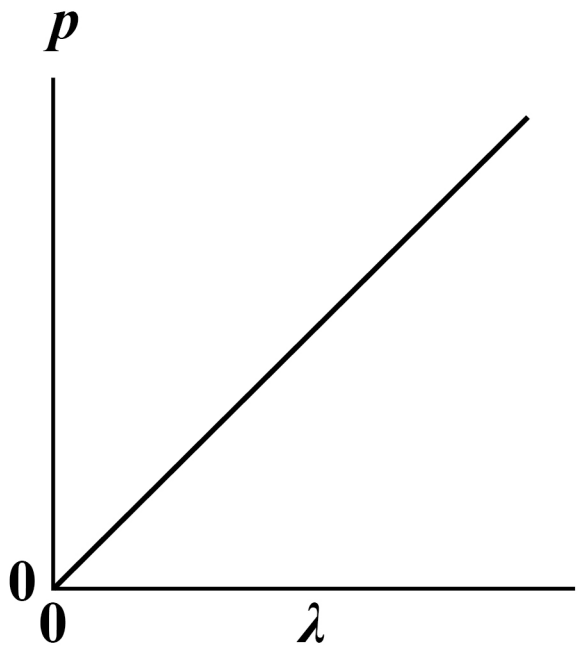

[Turn over]

1 4 **A monochromatic light wave travels from glass into air.**

Which row shows what happens to the wavelength, speed and photon energy? [1 mark]

		Wavelength	Speed	Photon energy
○	A	increases	increases	increases
○	B	does not change	decreases	does not change
○	C	does not change	decreases	increases
○	D	increases	increases	does not change

1 5 **A wave travels across the surface of water. The diagram shows how the displacement of water particles at the surface varies with distance.**

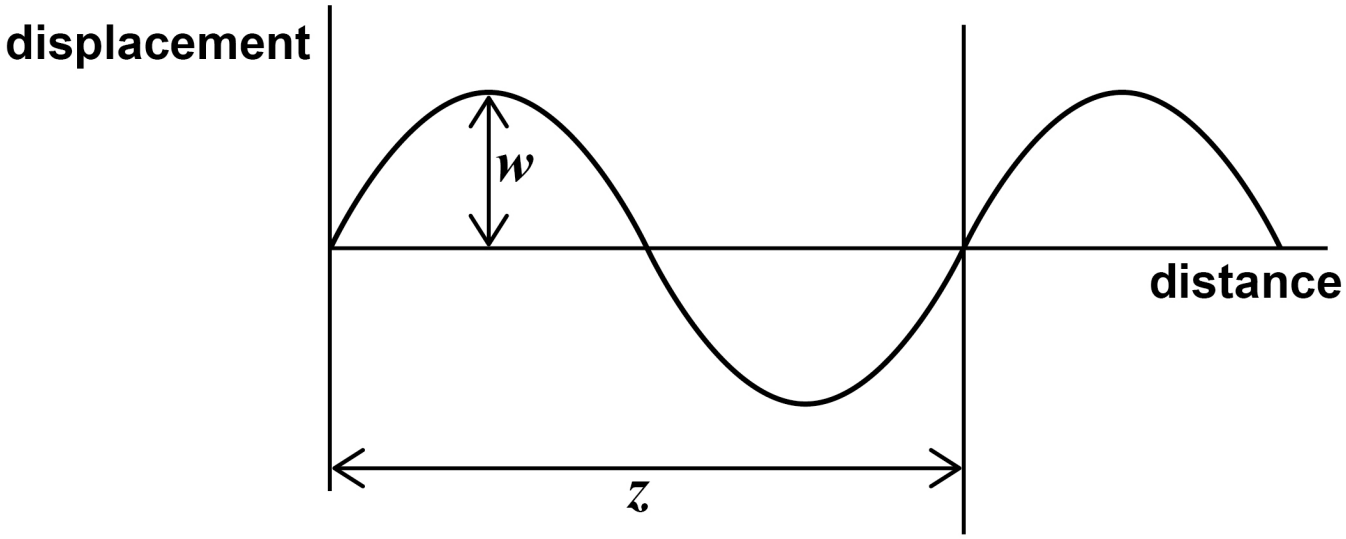

Which row correctly describes both *w* and *z*? [1 mark]

		w	*z*
○	A	amplitude	wavelength
○	B	half-amplitude	period
○	C	half-amplitude	wavelength
○	D	amplitude	period

BLANK PAGE

1 6 The diagram shows the cross-section of a progressive transverse wave travelling at $24\ \text{cm s}^{-1}$ on water. The amplitude of the wave is $2.0\ \text{cm}$ and the frequency is $4.0\ \text{Hz}$.

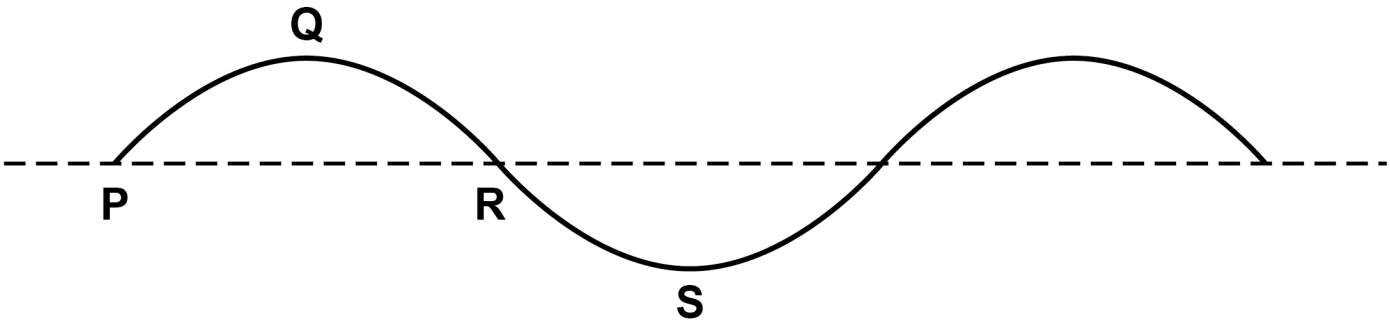

not to scale

Which statement is correct?
[1 mark]

○ A The phase difference between particles at P and S is $\frac{\pi}{2}\,\text{rad}$.

○ B The distance between P and R is $6.0\ \text{cm}$.

○ C The particle velocity at Q is a maximum.

○ D Particles at P and R are in phase.

[Turn over]

1 7 **Unpolarised light travels through two polarising filters X and Y and is then incident on a screen. When X and Y are arranged as shown, there is a maximum intensity on the screen.**

X is held stationary but Y is rotated in a plane at right angles to the beam so that θ increases.

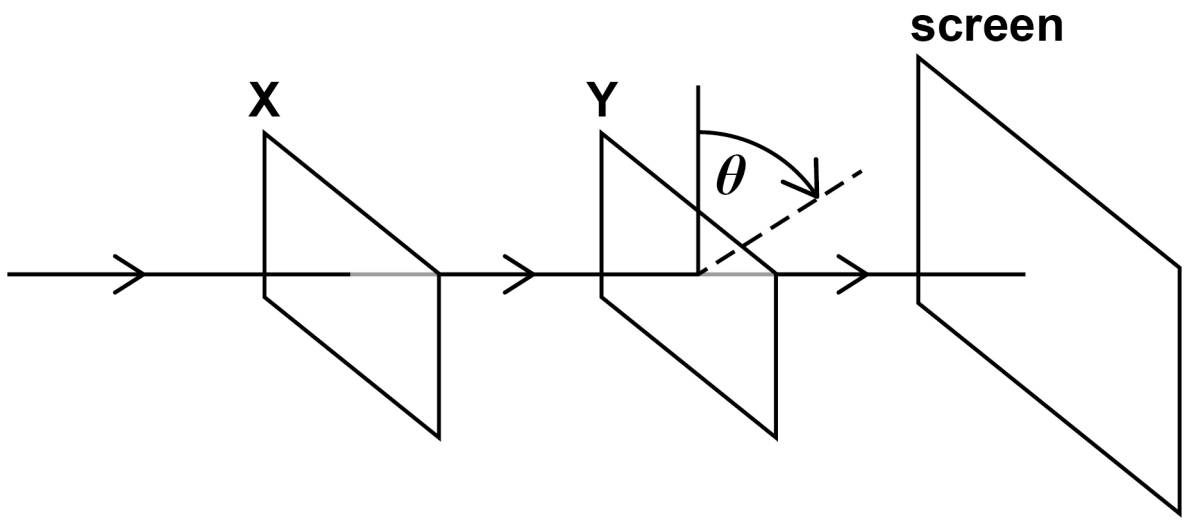

What are the next three values of θ, in rad, for which the beam hits the screen with maximum intensity? [1 mark]

○ **A** $\frac{\pi}{2}, \frac{2\pi}{2}, \frac{3\pi}{2}$

○ **B** $\frac{\pi}{2}, \frac{3\pi}{2}, \frac{5\pi}{2}$

○ **C** $\pi, 2\pi, 3\pi$

○ **D** $2\pi, 4\pi, 6\pi$

1 8 **Stationary waves are set up on a rope of length $1.0\ \text{m}$ fixed at both ends.**

Which statement is NOT correct? [1 mark]

○ **A The first harmonic has a wavelength of $2.0\ \text{m}$.**

○ **B The midpoint of the rope is always stationary for even-numbered harmonics.**

○ **C A harmonic of wavelength $0.4\ \text{m}$ can be set up on the rope.**

○ **D There are five nodes on the rope for the fifth harmonic.**

1 9 **Monochromatic light is incident normally on a diffraction grating that has 4.50×10^5 lines m^{-1}.**

The angle between the second-order diffraction maxima is $44°$.

What is the wavelength of the light? [1 mark]

○ **A** 208 nm

○ **B** 416 nm

○ **C** 772 nm

○ **D** 832 nm

2 0 **The diagram shows the forces acting on a uniform rod.**

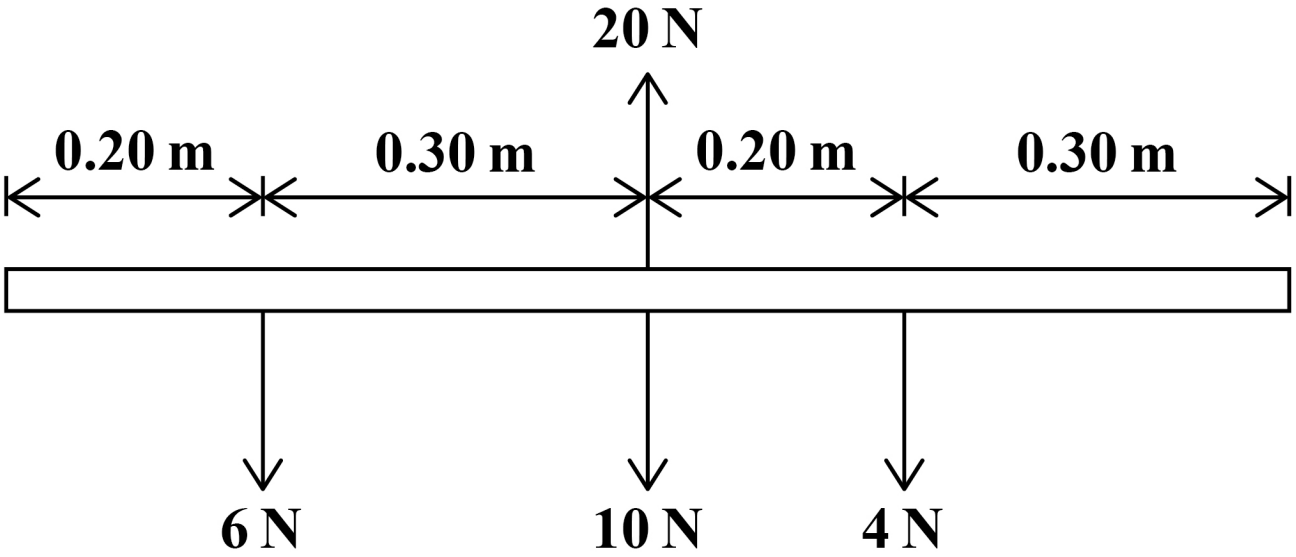

Which statement is correct? [1 mark]

○ **A The rod is in equilibrium.**

○ **B For equilibrium, an anticlockwise moment of 1.0 N m is needed.**

○ **C For equilibrium, a clockwise moment of 1.0 N m is needed.**

○ **D For equilibrium, the 10 N force should be increased to 20 N.**

2 1 **Small water drops leave a tap with zero velocity at intervals of $0.20\ \text{s}$.**

They then fall freely $0.80\ \text{m}$ to reach a horizontal surface.

How far has a drop fallen when the previous drop hits the surface? [1 mark]

○ **A** $0.16\ \text{m}$

○ **B** $0.20\ \text{m}$

○ **C** $0.40\ \text{m}$

○ **D** $0.60\ \text{m}$

[Turn over]

2 2 A pellet with velocity $200\ \text{m s}^{-1}$ and mass $5.0\ \text{g}$ is fired vertically upwards into a stationary block of mass $95.0\ \text{g}$. The pellet remains in the block. The impact causes the block to move vertically upwards.

What is the maximum vertical displacement of the block? [1 mark]

○ **A** 5.1 m

○ **B** 10 m

○ **C** 51 m

○ **D** 100 m

2 3 An electric motor lifts a load of weight W through a vertical height h in time t.
The potential difference across the motor is V and the current in it is I.

What is the efficiency of the motor? [1 mark]

○ **A** $\frac{Wh}{VIt}$

○ **B** $\frac{VI}{Wht}$

○ **C** $\frac{Wht}{VI}$

○ **D** $\frac{VIt}{Wh}$

[Turn over]

2 4 **A particle of mass m undergoes simple harmonic motion with amplitude A and frequency f.**

What is the total energy of the particle? [1 mark]

○ **A** $2\pi mfA^2$

○ **B** $2\pi^2 mf^2A^2$

○ **C** $4\pi^2 m^2 f^2 A$

○ **D** $4\pi^2 mf^2A^2$

2 5 A mass of $0.90\ \text{kg}$ is suspended from the lower end of a light spring of stiffness $80\ \text{N m}^{-1}$.

When the mass is displaced vertically and released, it undergoes vertical oscillations of small amplitude.

What is the frequency of the oscillations? [1 mark]

○ **A** 0.071 Hz

○ **B** 0.67 Hz

○ **C** 1.50 Hz

○ **D** 14 Hz

[Turn over]

2 6 **An experiment is carried out to determine the Young modulus E of steel using a vertical wire of initial length L and cross-sectional area A. Various weights are suspended from the wire. A graph of extension against weight is plotted.**

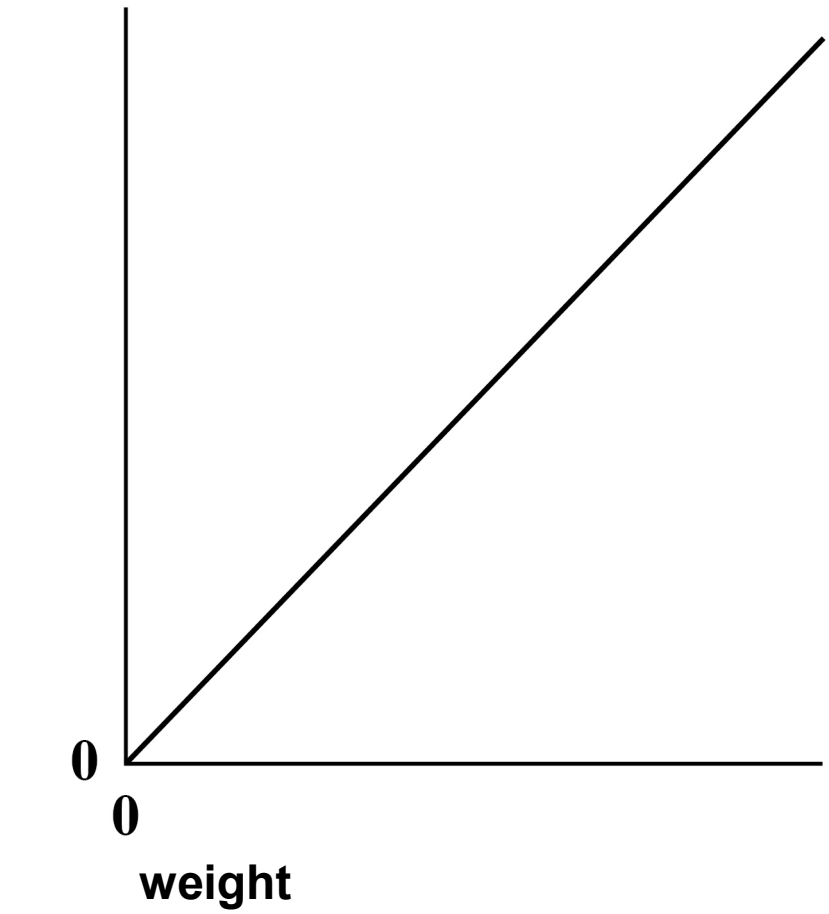

What does the gradient of the graph represent? [1 mark]

A E

B $\frac{1}{E}$

C $\frac{EA}{L}$

D $\frac{L}{EA}$

2 7 **In the circuit below, the voltmeter reading is zero.**

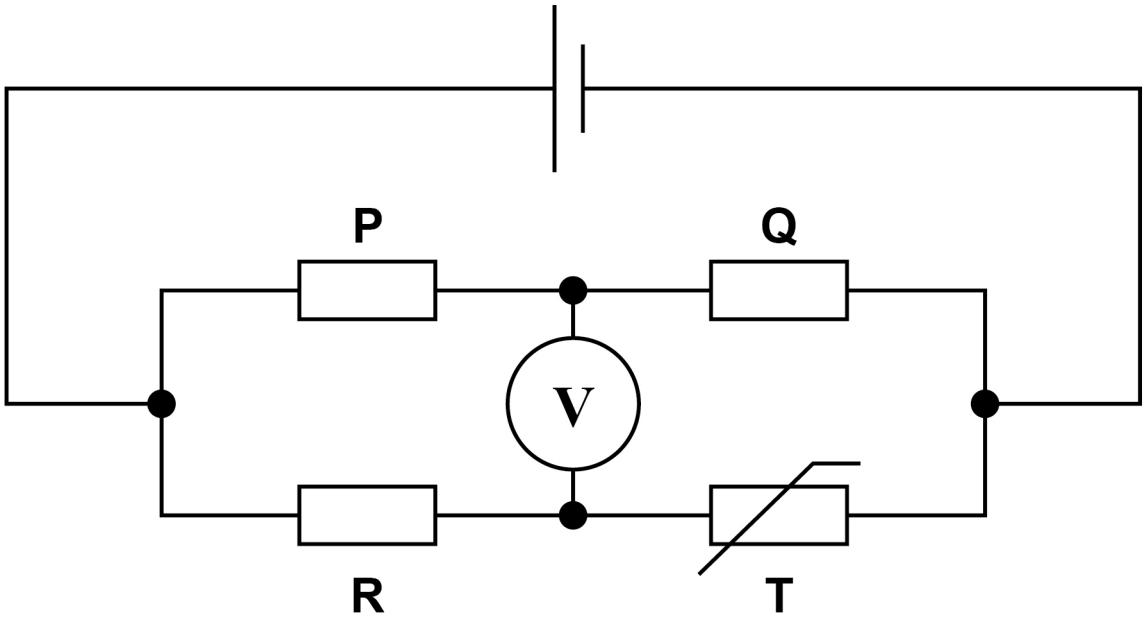

When the temperature of the thermistor T is increased, the voltmeter reading changes.

Which change to the circuit will restore the voltmeter to zero? [1 mark]

○ **A a reduction in the emf of the cell**

○ **B a reduction in the resistance of P**

○ **C an increase in the resistance of Q**

○ **D a reduction in the resistance of R**

[Turn over]

2 8 **A resistor of resistance R and three identical cells of emf E and internal resistance r are connected as shown.**

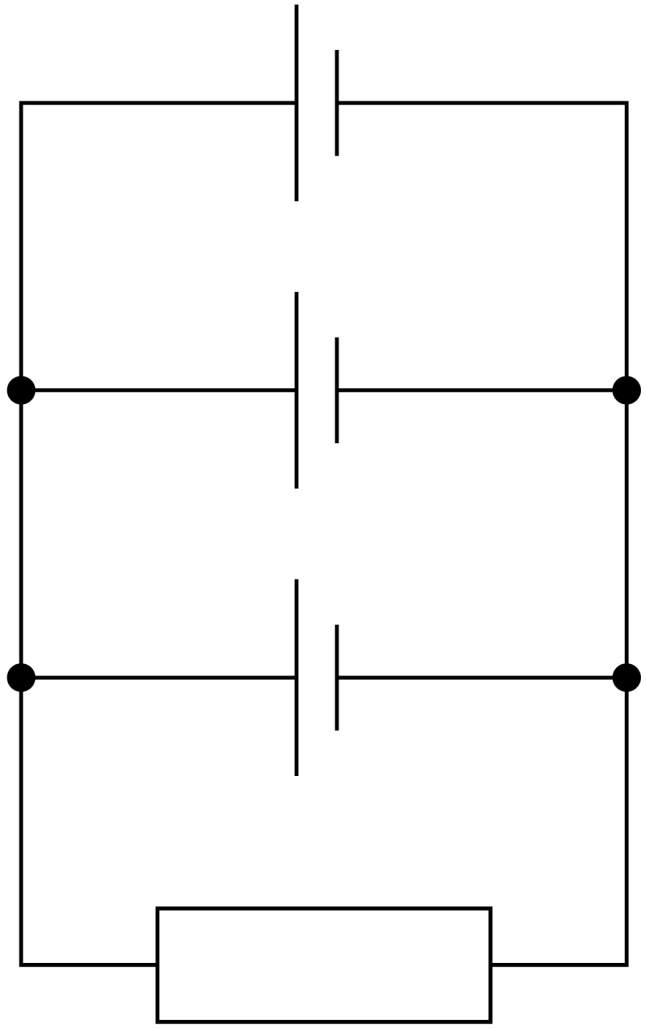

What is the current in the resistor? [1 mark]

A $\frac{3\mathrm{E}}{(3R + r)}$

B $\frac{9\mathrm{E}}{(3R + r)}$

C $\frac{E}{R}$

D $\frac{3E}{R}$

2 9 **In the circuit, the reading of the voltmeter is V.**

When the switch is closed the reading becomes $\frac{V}{3}$.

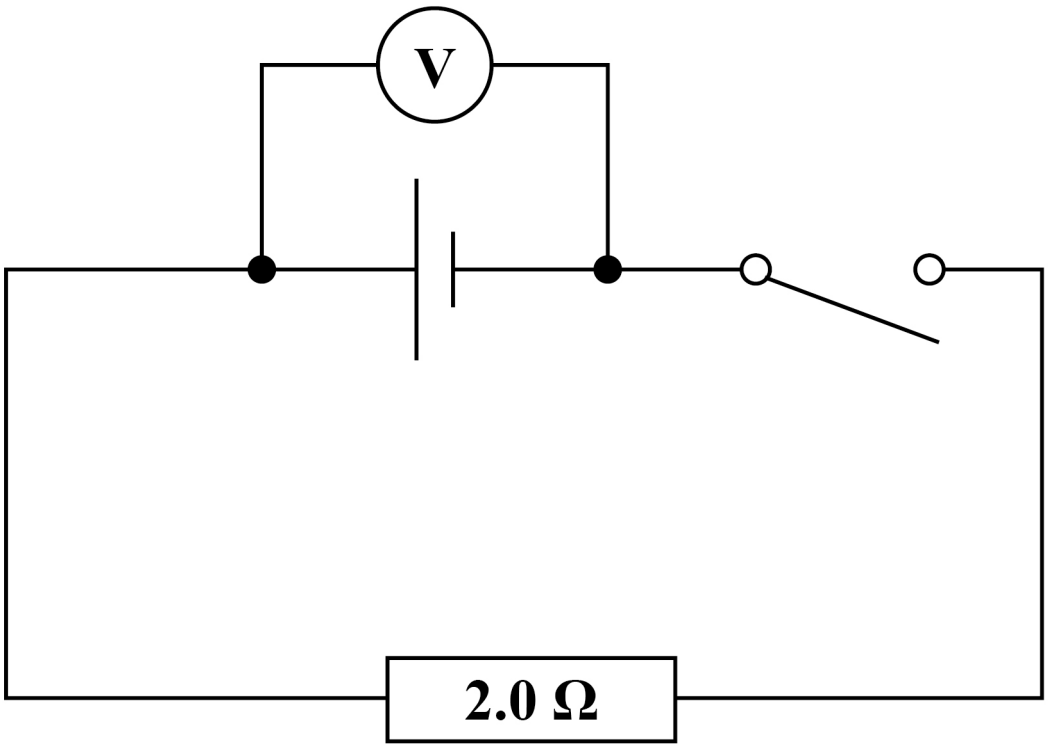

What is the internal resistance of the cell?
[1 mark]

- ○ **A** 0.33 Ω
- ○ **B** 0.67 Ω
- ○ **C** 4.0 Ω
- ○ **D** 6.0 Ω

[Turn over]

3 0 The period of a simple pendulum is doubled when the pendulum length is increased by $1.8\ \text{m}$.

What is the original length of the pendulum? [1 mark]

○ **A** $0.45\ \text{m}$

○ **B** $0.60\ \text{m}$

○ **C** $0.90\ \text{m}$

○ **D** $3.6\ \text{m}$

END OF QUESTIONS

25

Additional page, if required.
Write the question numbers in the left-hand margin.

Additional page, if required.
Write the question numbers in the left-hand margin.

Additional page, if required.
Write the question numbers in the left-hand margin.

BLANK PAGE

For Examiner's Use	
Question	Mark
1	
2	
3	
4	
5	
6–30	
TOTAL	

Copyright information

For confidentiality purposes, all acknowledgements of third-party copyright material are published in a separate booklet. This booklet is published after each live examination series and is available for free download from www.aqa.org.uk.

Permission to reproduce all copyright material has been applied for. In some cases, efforts to contact copyright-holders may have been unsuccessful and AQA will be happy to rectify any omissions of acknowledgements. If you have any queries please contact the Copyright Team.

Copyright © 2020 AQA and its licensors. All rights reserved.